Prob. 1: The rope AB exerts a 50-N force T on collar A. Determine the vector component of T parallel to the bar CD.

[Ans: $\boldsymbol{T} = (\mathbf{3.43}\boldsymbol{i} + \mathbf{5.14}\boldsymbol{j} - \mathbf{4.29}\boldsymbol{k})\boldsymbol{N}$]

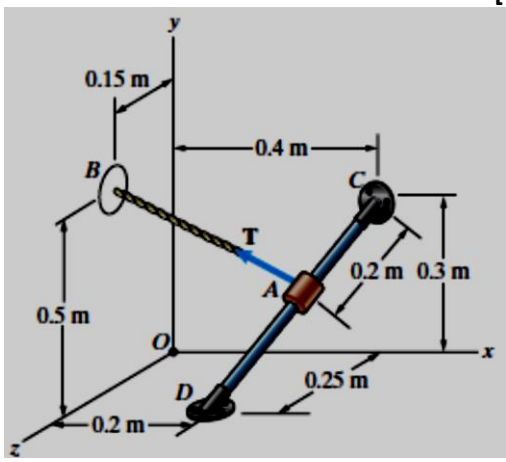

Prob. 2: The person exerts a force $\boldsymbol{F} = 60i - 40j\ (N)$ on the handle of the exercise machine. Determine the vector component of **F** that is parallel to the line from the origin O to where the person grips the handle.

[Ans: $\boldsymbol{F} = (\mathbf{14.0}\boldsymbol{i} + \mathbf{11.2}\boldsymbol{j} + \mathbf{8.4}\boldsymbol{k})\boldsymbol{N}$]

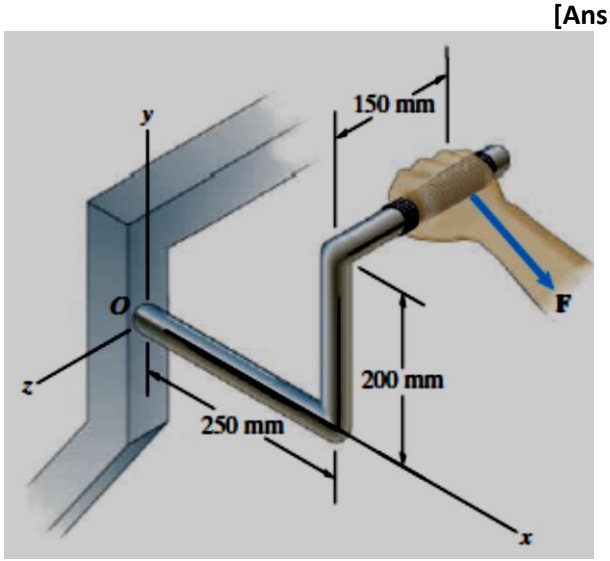

Prob. 3: The tension in the cable BD is 1 kN. As a result, cable BD exerts a 1-kN force on the "ball" at B that points from B toward D. Determine the moment of this force about point A.

[**Ans: $\boldsymbol{M} = (\mathbf{1.667}\boldsymbol{i} - \mathbf{3.33}\boldsymbol{j} + \mathbf{3.33}\boldsymbol{k})\ \boldsymbol{kN}$.m**]

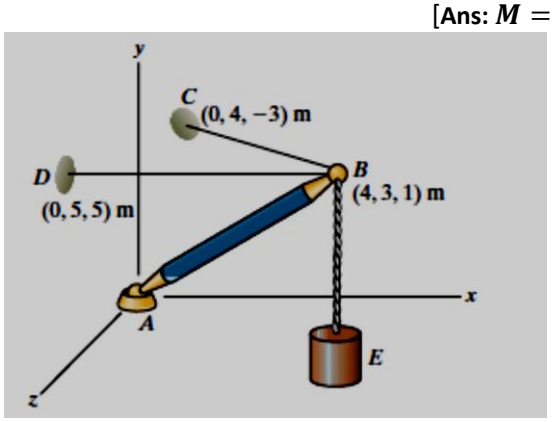

Prob. 4: The magnitude of the force F is 0.2 N and its direction cosines are $cos\ \theta_x = 0.727$, $cos\ \theta_y = 0.364$, and $cos\ \theta_z = 0.582$. Determine the magnitude of the moment of F about the axis AB of the spool.

[**Ans: *M*= 0.0146 N.m**]

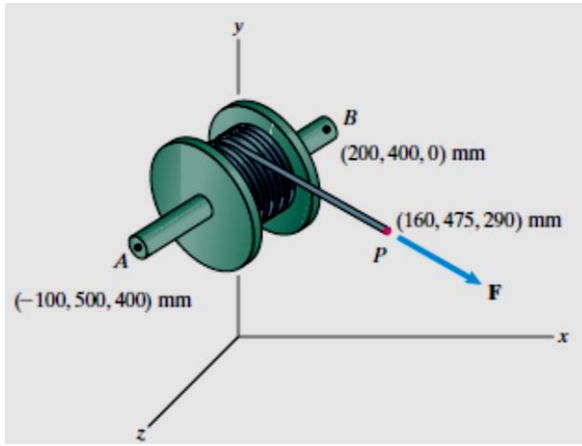

Prob. 5: The radius of the steering wheel is 200 mm. The distance from O to C is 1 m. The center C of the steering wheel lies in the x _ y plane. The driver exerts a force $F = 10i + 10j - 5k\ (N)$ on the wheel at A. If the angle $\alpha = 0$, what is the magnitude of the moment about the shaft OC? Draw a sketch to indicate the sense of the moment about the shaft.

[**Ans: *M*= 0.9998 N.m**]

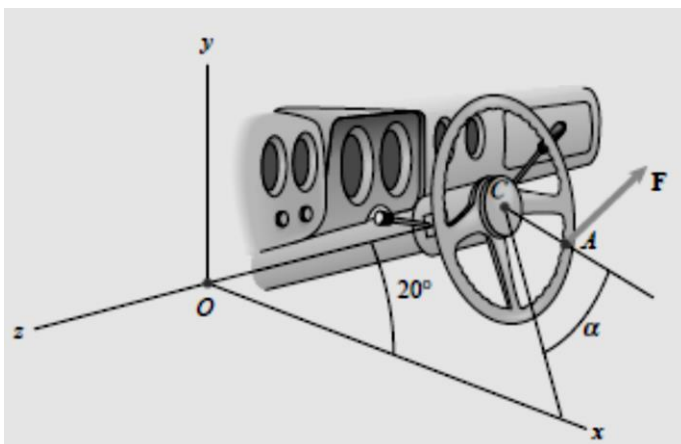

Prob. 6: The rectangular platform is hinged at A and B and is supported by a cable that passes over a frictionless hook at E. Knowing that the tension in the cable is 1349 N, determine the moment about each of the coordinate axes of the force exerted by the cable at D.

[**Ans: M_x= - *1283* N.m, M_y=*770* N.m, M_z=-*1824* N.m**]

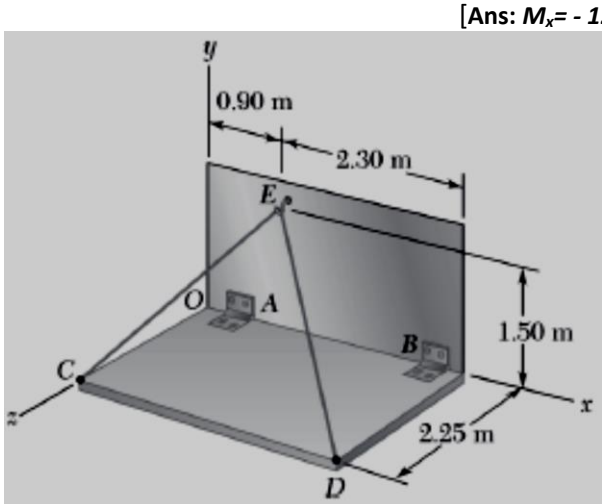

Prob. 7: A 400-N force is applied to the welded slender bar at an angle $\theta = 20^0$. Determine the equivalent force-couple system acting on the weld at (a) point A and (b) point O. For what value of θ would the results of parts (a) and (b) be identical?

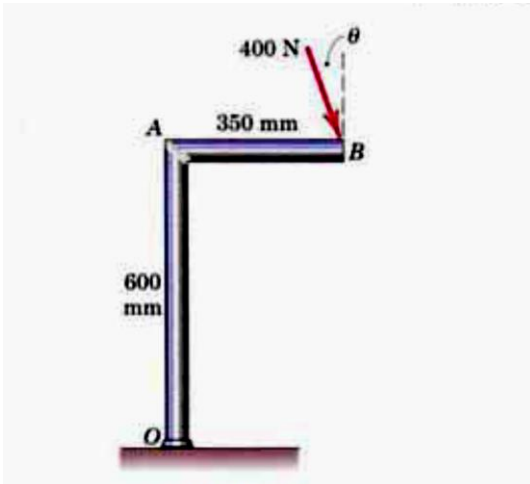

Prob. 8: A force **F** of magnitude 50-N is exerted on the automobile parking brake lever at the position $x = 250\ mm$. Replace the force by an equivalent force-couple system at the pivot point O. **[Ans: R=50 N, M_O=17.29 N.m CCW]**

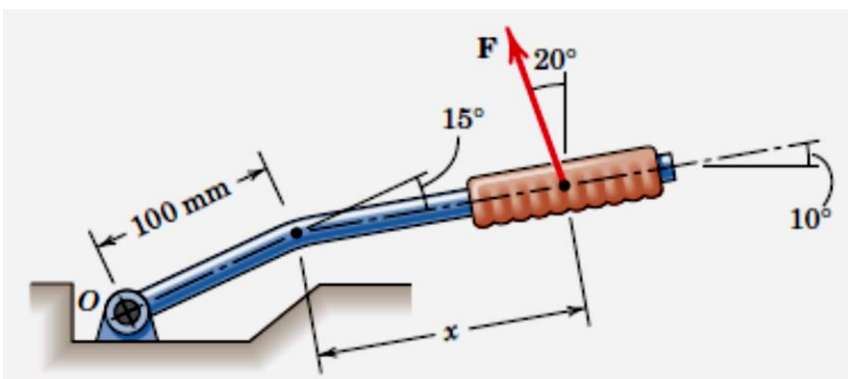

Prob. 9: A 50-lb force is applied to the control pedal as shown. The force lies in a plane parallel to the x-z plane and is perpendicular to BC. Determine the moments of this force about point O and about the shaft OA.

[Ans: M_O=-90.6i-690j-338k lb.in, M_{OA}=690 lb.in]

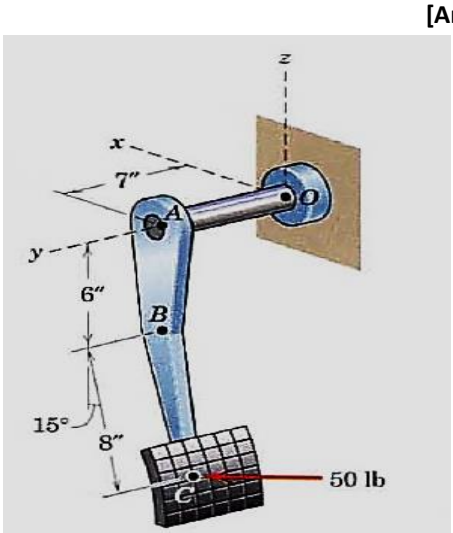

Prob. 10: A 110-N force acting in a vertical plane parallel to the yz-plane is applied to the 220-mm-long horizontal handle AB of a socket wrench. Replace the force with an equivalent force couple system at the origin O of the coordinate system.

[Ans: M_O=(12.35 N.m)i-(19.16 N.m)j-(5.13N.m)k]

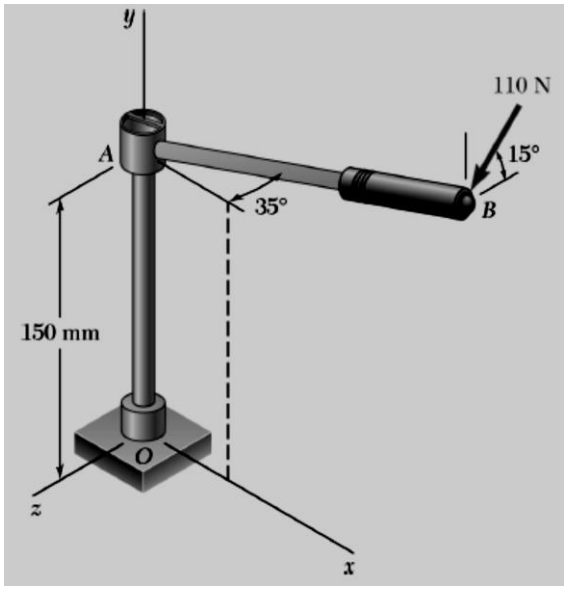

Prob. 11: The system consisting of the bar OA, two identical pulleys and a section of thin tape is subjected to the two 180-N tensile forces shown in the figure. Determine the equivalent force-couple system at point O.
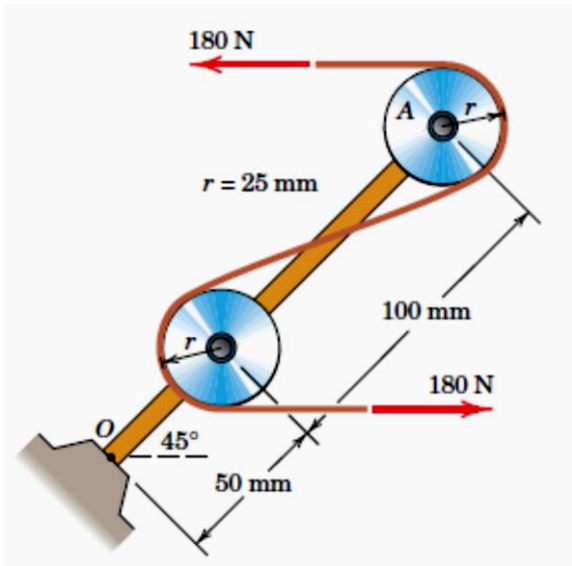
[**Ans: *M*= 21.7 N.m CCW**]